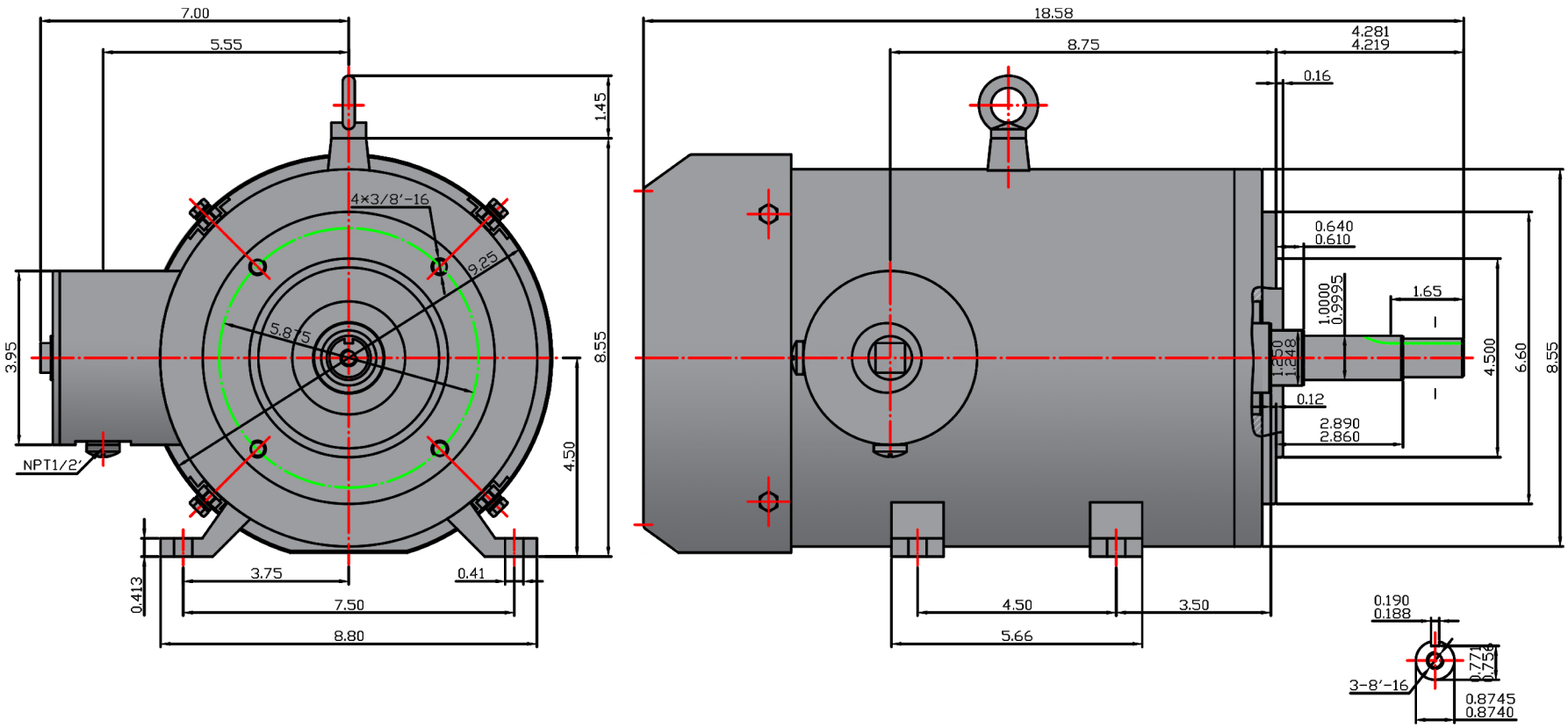

Version:1WEI	Revised: August 2022	HP	RPM	FRAME	ENCLOSURE
Customer is responsable in determining that MaxMotion product will fit/perform suitably in the intended application		3	1800	182JM	TEFC

JMQPS/JMPPS-17